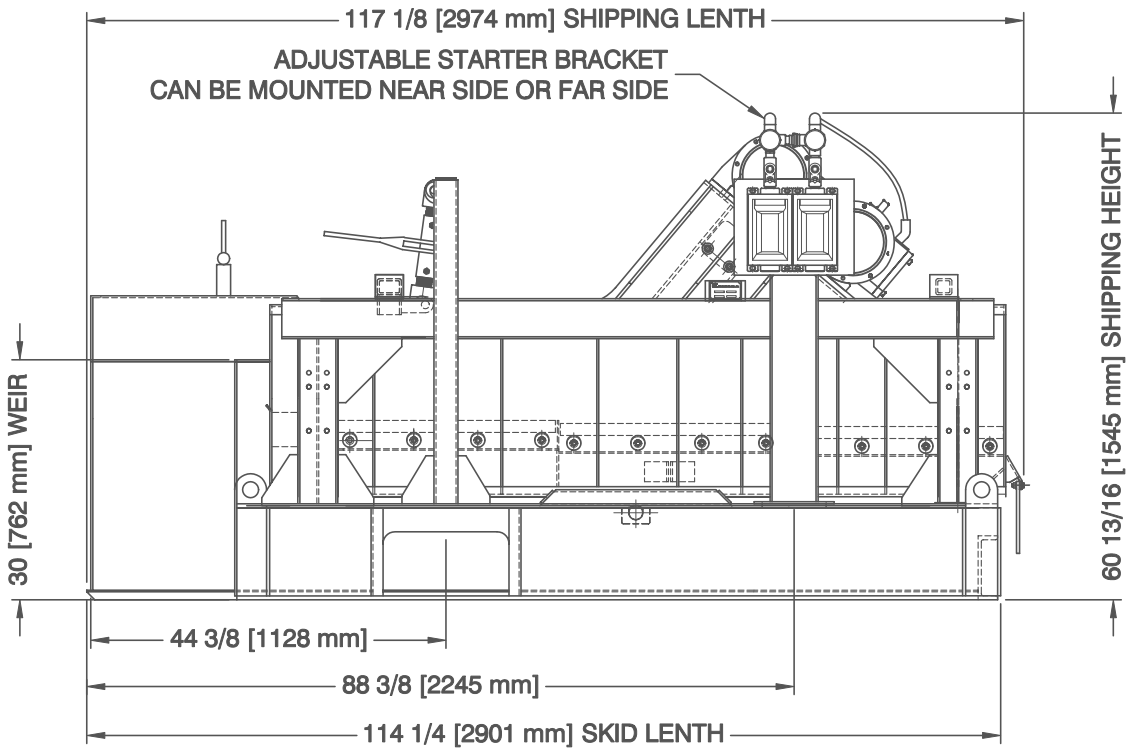

SIDE VIEW

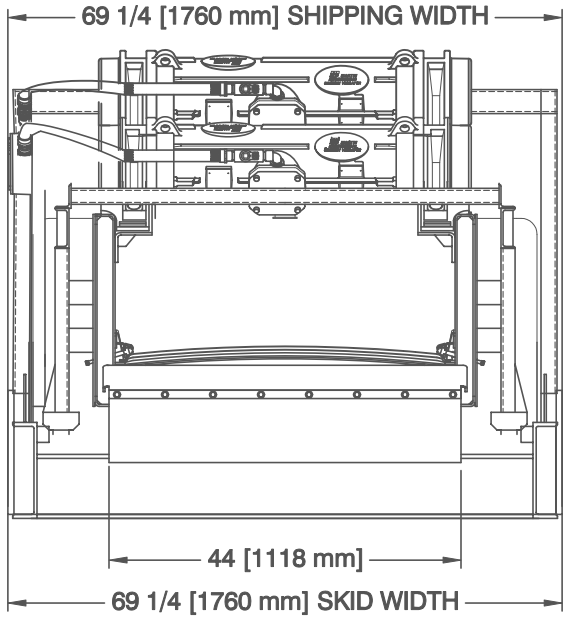

END VIEW

REVISIONS

NO.	ZONE	DESCRIPTION	BY	DATE

NOTES

1. All dimensions are in inches unless otherwise noted.

NOTICE
The information contained herein is proprietary and may not be copied or transmitted to another party without the written consent of the owner, THE DOUBLE LIFE CORP., INC.

the double life corp., inc.

TITLE
CUSTOMER INSTALLATION & DIMENSIONAL DRAWING AWD III CHANNEL STYLE WITH ENCAPSULATED MOTORS

PART NO.	DRAWN BY	DATE	SCALE	REVIEWED BY
	MW	3-11-03	NTS	SB

SHEET NO.	DRAWING NO.	REV. NO.	SIZE	SEQ.
1/1	99-01573	0	A	1