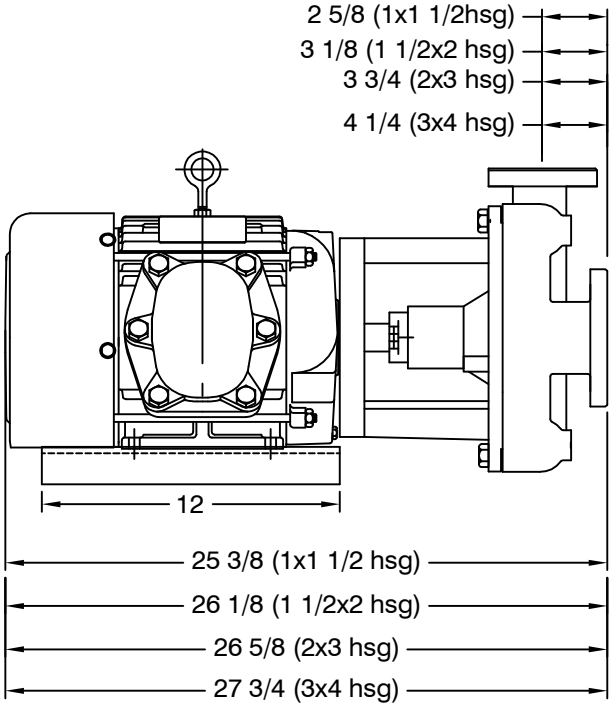

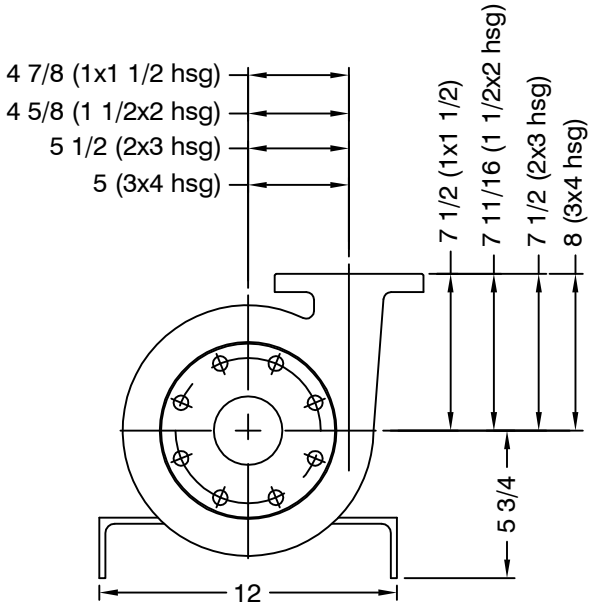

REVISIONS						
NO.	ZONE	DESCRIPTION	BY	DATE		

NOTES

1. All dimensions are in inches unless otherwise noted.

NOTICE
The information contained herein is proprietary and may not be copied or transmitted to another party without the written consent of the owner, THE DOUBLE LIFE CORP., INC.

the double life corp., inc.

TITLE

CUSTOMER DRAWING & DIMENSIONAL DRAWING SPACE SAVER

PART NO.	DRAWN BY	DATE	SCALE	REVIEWED BY
	MW	3-11-03	NTS	SB

SHEET NO.	DRAWING NO.	REV. NO.	SIZE	SEQ.
1/1	99-01897	0	A	1