BILL OF MATERIALS

MARK	PART NO.	QUAN.	DESCRIPTION	WEIGHT
1	69003-M	1	I-310 Desander Manifold	855.62
2	DL1000	3	10" Cone Assembly	258.00
3	68025	2	Coupling, 10"	64.00
4	68017	2	Coupling, 8"	25.00
5	68014	6	Coupling, 5"	33.00
6	68054	1	Nipple, Grooved, 10"	16.87
7	68053	1	Nipple, Grooved, 8"	11.90
8	68035-M	1	Cap, Grooved, 10"	20.00
9	68034-M	1	Cap, Grooved, 8"	12.00
10	DBLFG100	1	Pressure Gauge	0.50
11	0062	1	Nameplate	0.10
12	B03F52081300032	6	Cap Screw, 1/2-13 x 2"	0.90
13	W01052170908000	12	Flatwasher, 1/2"	0.12
14	L030520000080000	6	Lockwasher, 1/2"	0.12
15	N19052081300000	6	Hex Nut, 1/2-13	0.24
			TOTAL WEIGHT	1298.37

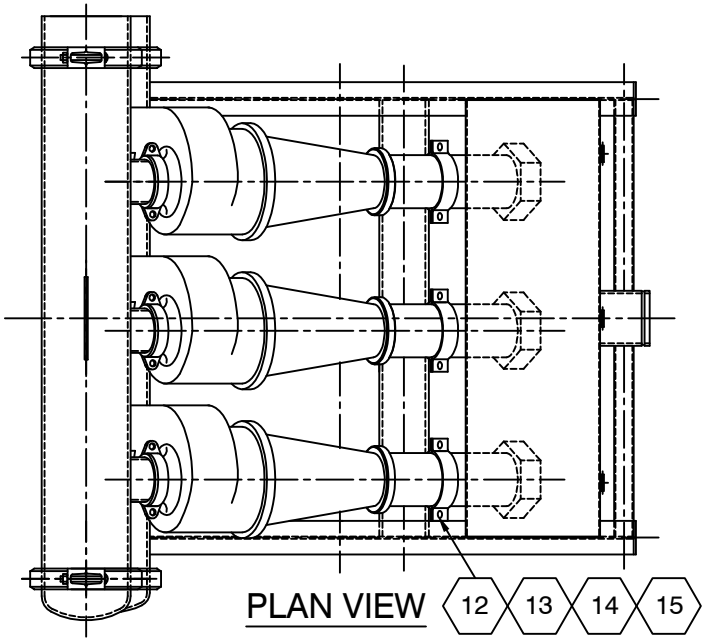

PLAN VIEW

FLOW REQUIREMENTS

1500 TO 1650 G.P.M. @ 65 TO 75 HD. FT.

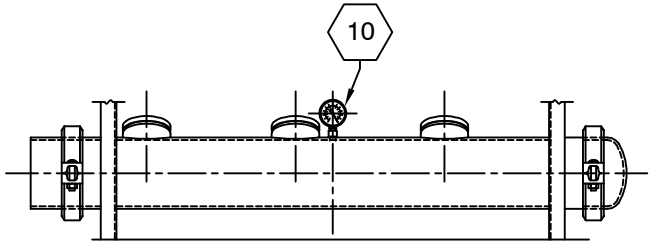

VIEW A-A

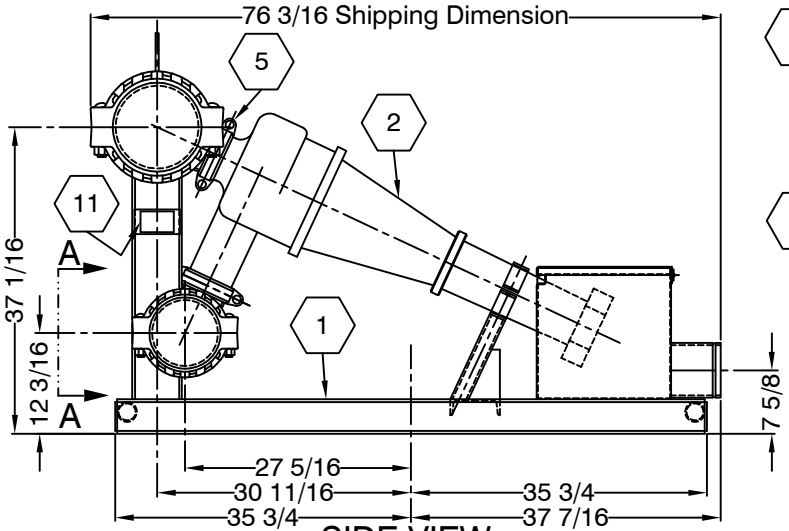

SIDE VIEW

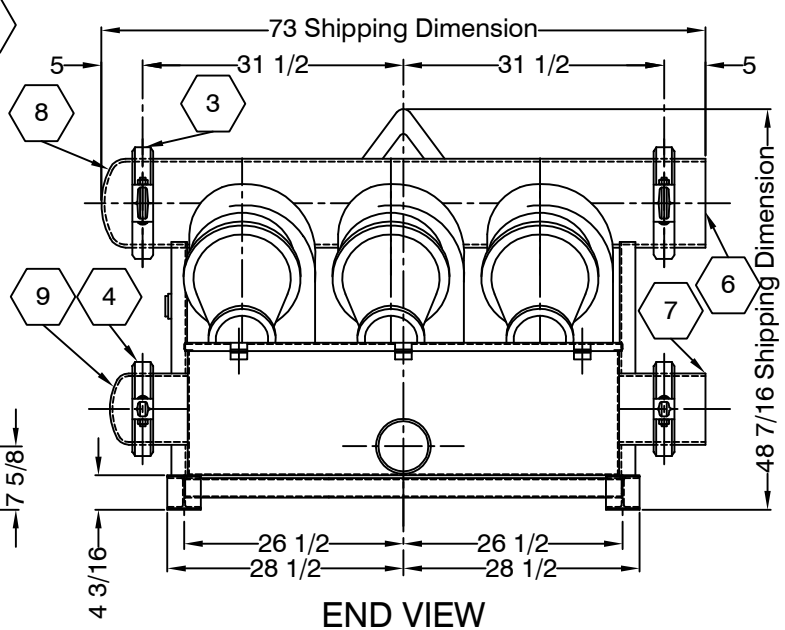

END VIEW

REVISIONS				
NO.	ZONE	DESCRIPTION	BY	DATE

NOTES

1. All dimensions are in inches unless otherwise noted.

NOTICE

The information contained herein is proprietary and may not be copied or transmitted to another party without the written consent of the owner, THE DOUBLE LIFE CORP., INC.

the double life corp., inc.

TITLE

INSTALLATION DRAWING & PARTS LISTING I-310 DESANDER

PART NO.	DRAWN BY	DATE	SCALE	REVIEWED BY
69003	DH	11/20/01	NTS	SB

SHEET NO.	DRAWING NO.	REV. NO.	SIZE	SEQ.
1/1	99-01375	0	A	1